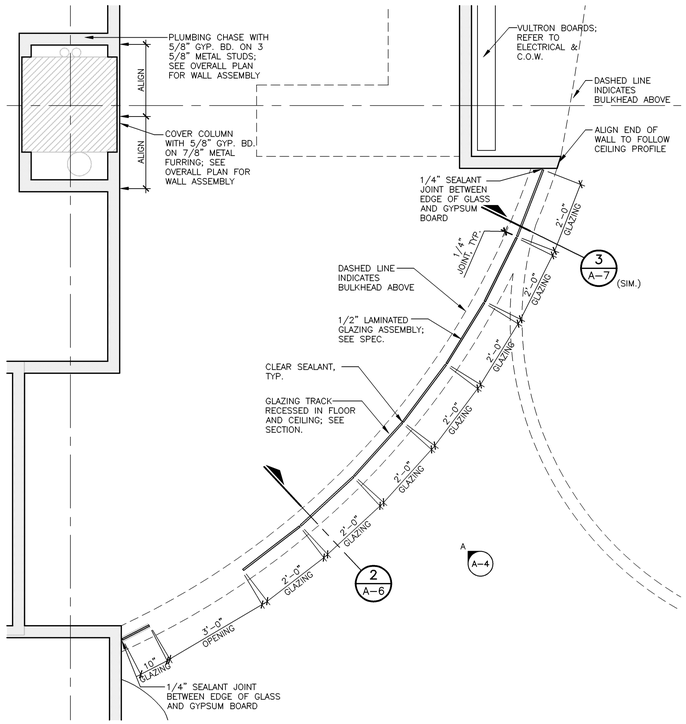

9 A-1 CUSTOMER SERVICE 115
ENLARGED FLOOR PLAN
SCALE: 1/2" = 1'-0"

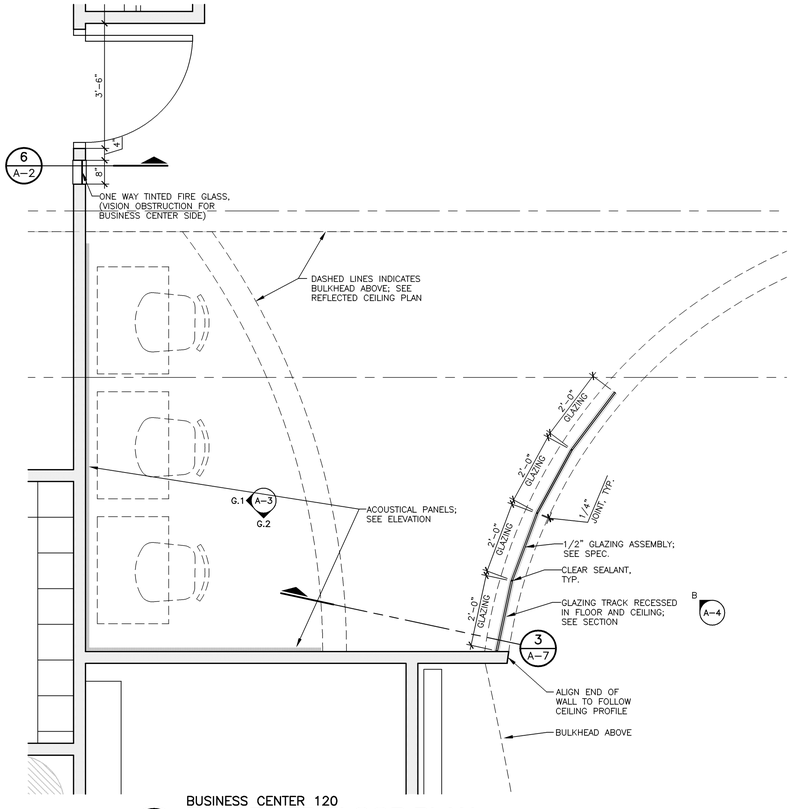

8 A-1 BUSINESS CENTER 120
ENLARGED FLOOR PLAN
SCALE: 1/2" = 1'-0"

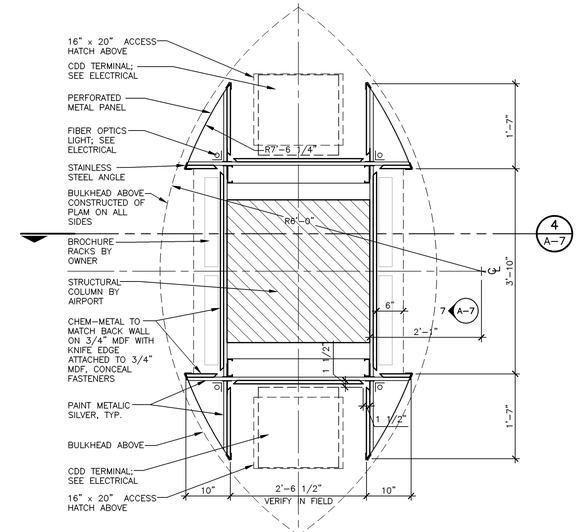

10 A-1 A-7 A-8 CDD TERMINALS
COLUMN DETAIL
SCALE: 3/4" = 1'-0"

NOTE:
1. NO EXPOSED FASTENERS ON CHEM-METAL PANELS
2. CHAMFER EDGES OF MDF PANELS, PAINT MATTE BLACK

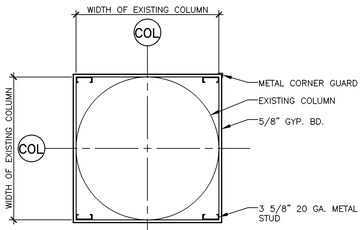

7 A-1 COLUMN DETAIL
SCALE: 3/4" = 1'-0"

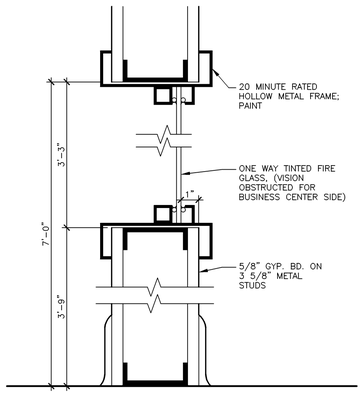

6 A-2 RECEPTION 119
SECTION
SCALE: 3" = 1'-0"

NOTE:
1. EASE EDGE OF CASING 1/16"
2. COORDINATE COLOR OF PAINT W/ ARCHITECT

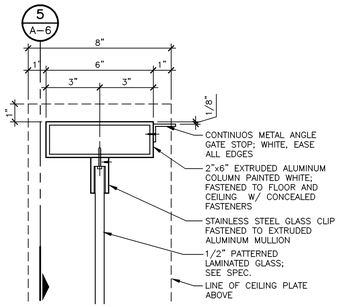

4 A-2 A-7 MULLION DETAIL @ GATE
SCALE: 3" = 1'-0"

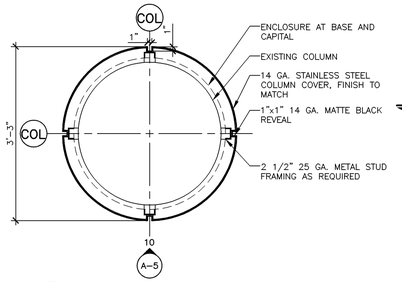

3 A-1 COLUMN DETAIL
SCALE: 3/4" = 1'-0"

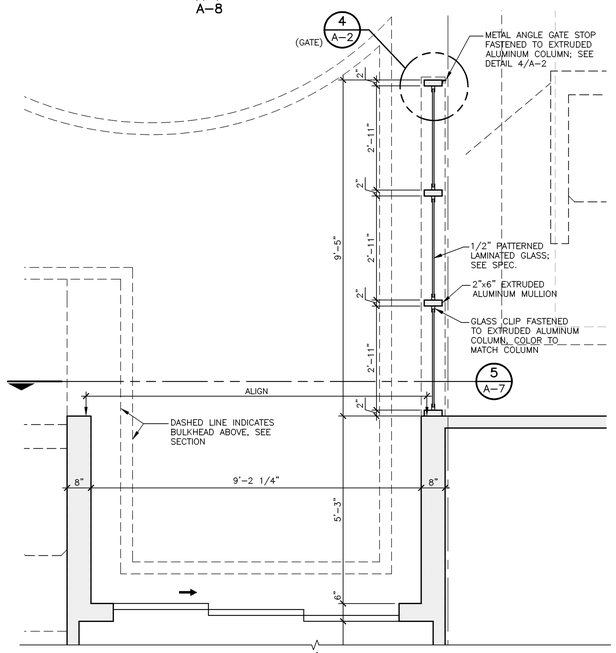

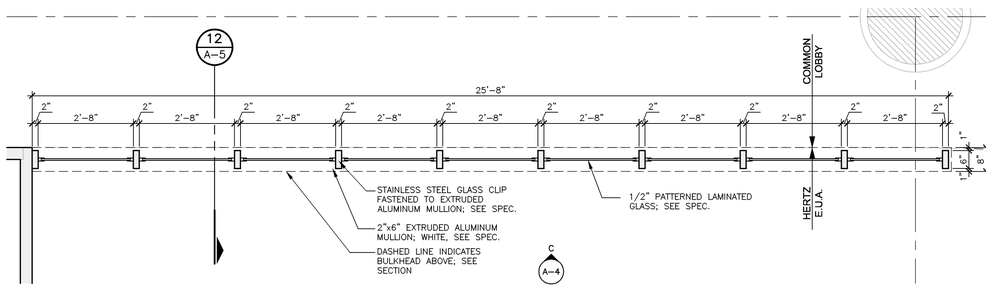

2 A-1 CUSTOMER WAITING 135
ENLARGED FLOOR PLAN
SCALE: 1/2" = 1'-0"

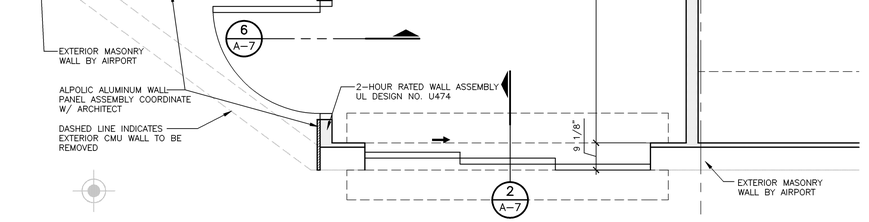

1 A-1 ENTRY 133/ VESTIBULE 123
ENLARGED FLOOR PLAN
SCALE: 1/2" = 1'-0"

Drawn By	GEG
Designer	NJJ
Manager	NLJ

8/17/2005 REVISED IN ACCORDANCE WITH CONSTRUCTION RECORDS

Hard copy is intended to be 24"x36" when plotted.
Scale(s) indicated are not accurate for any other size.

fr&h
Fishbeck, Thompson, Carr & Huber
Engineers • Scientists • Architects
Grand Rapids, Michigan (616) 575-3824

© Copyright 2005 All Rights Reserved

The Hertz Corporation
HERTZ RAC
Fort Lauderdale
Hollywood International Airport

PROJECT NO.
01620CD

SHEET NO.
A-2

M:\DITRAN\AC4J2002\7\MBR3\7\D4551T.DWG
N:\01620CD\BASES\FB0001E20C.DWG
N:\01620CD\BASES\FB0001E20C.DWG
N:\01620CD\BASES\FB0001E20C.DWG
N:\01620CD\BASES\FB0001E20C.DWG
N:\01620CD\BASES\FB0001E20C.DWG
N:\01620CD\BASES\FB0001E20C.DWG
PLOT INFO: N:\01620CD\CD\A002016 20C.DWG DATE: 9/23/2005 TIME: 8:21:54 AM USER: ML